7472

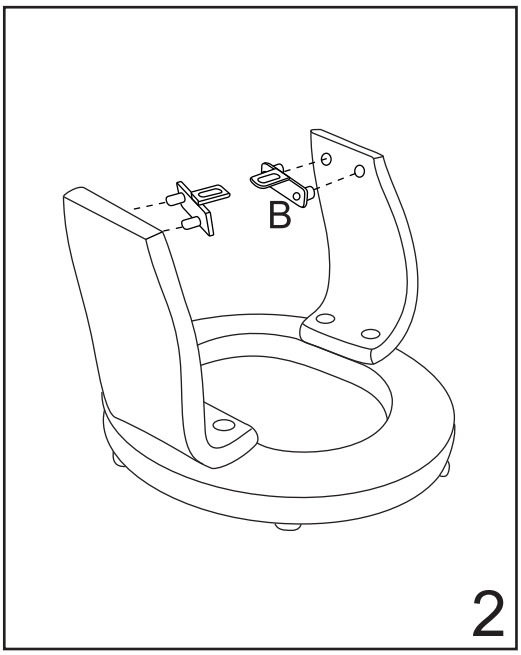

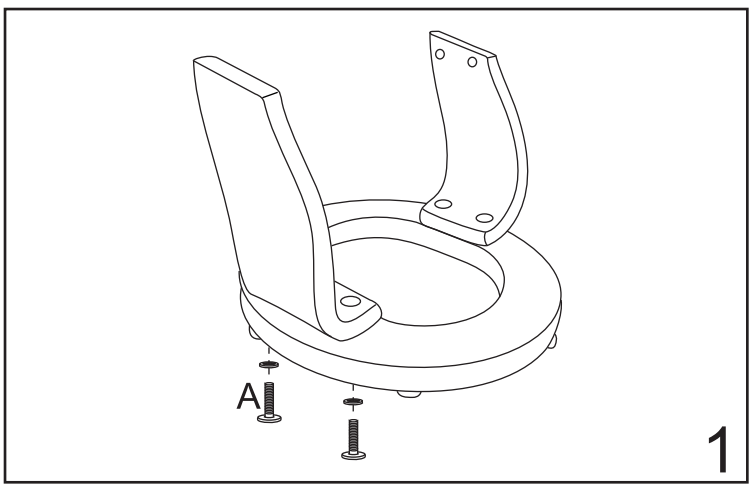

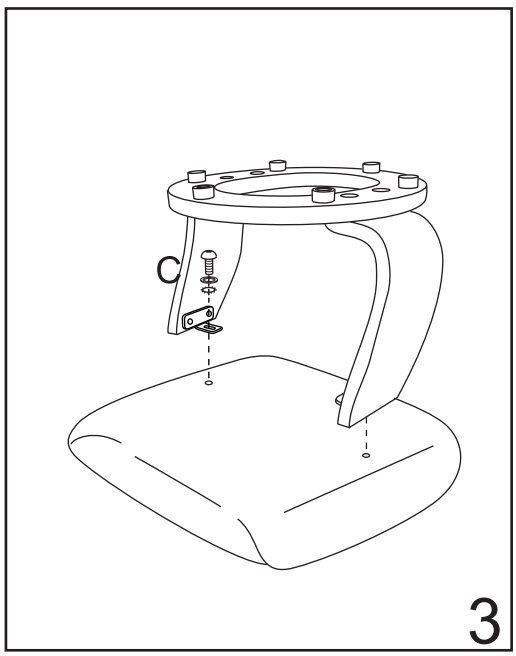

A	M8X38	4PCS	D	M8X35	2PCS	G		2PCS
B		2PCS	E	M8X70	2PCS	H		1PC
C	M6X20	2PCS	F	M6X25	4PCS			

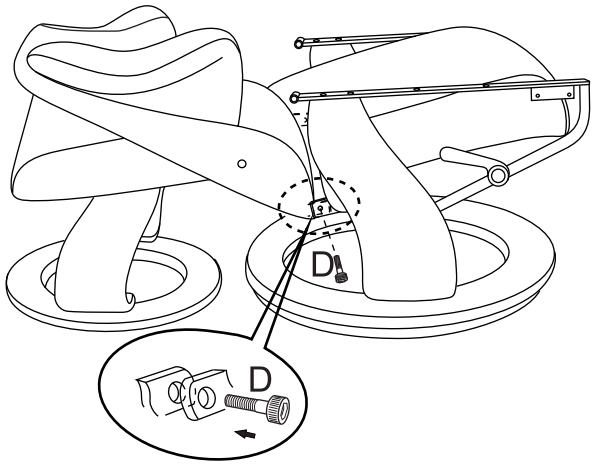

4

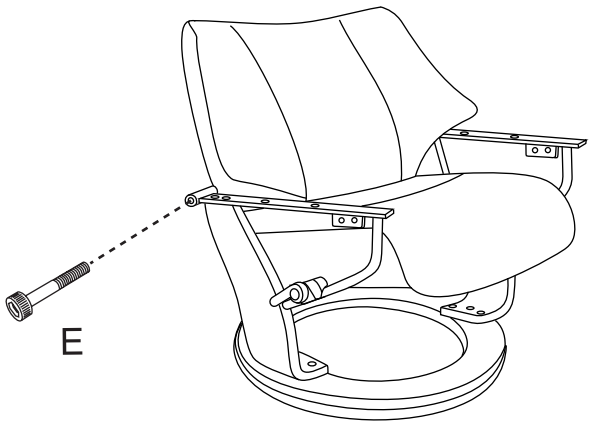

5

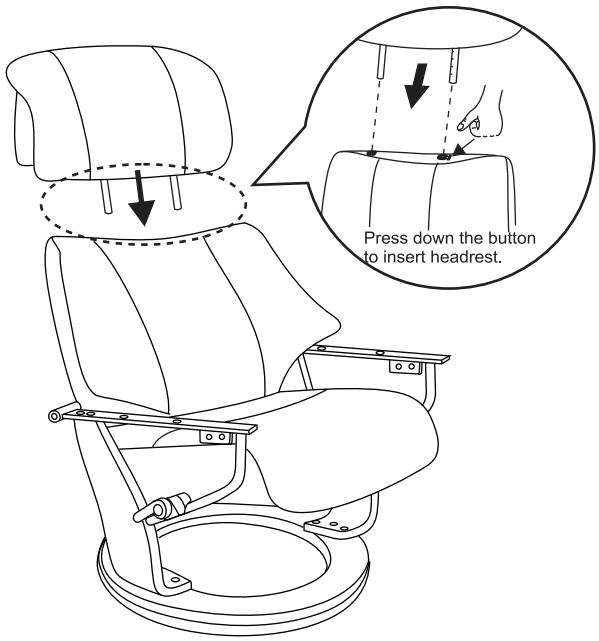

6

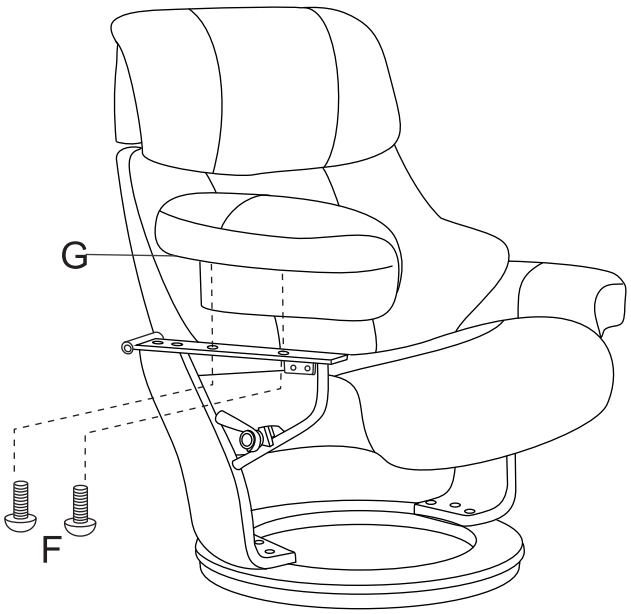

7