ASSEMBLY INSTRUCTIONS

MODEL : 914 2S/3-2S

Thank you for purchasing this quality product. Be sure to lay all components on a soft and clean surface before assembly in order to avoid components from being scratched.

CAUTIONS :

1. Check contents against hardware list.
2. Familiarize yourself with the components and hardware by reviewing the Assembly Instructions.
3. Do not over tighten the screws and bolts as it may damage the threads.
4. Keep all hardware parts out of reach of children.
5. Please "LIFT UP & MOVE" the sofa whenever you want to shift it.

2S

HARDWARE LIST

NO.	DESCRIPTION	QTY
A	M8 x 25mm SCREW	8 PCS
B	WOODEN LEG	4 PCS
C	M5 ALLEN KEY	1 PC

3-2S

HARDWARE LIST

NO.	DESCRIPTION	QTY
A	M8 x 25mm SCREW	8 PCS
B	WOODEN LEG	4 PCS
C	M5 ALLEN KEY	1 PC
D	PLASTIC WASHER	1 PC
E	SUPPORT LEG	1 PC

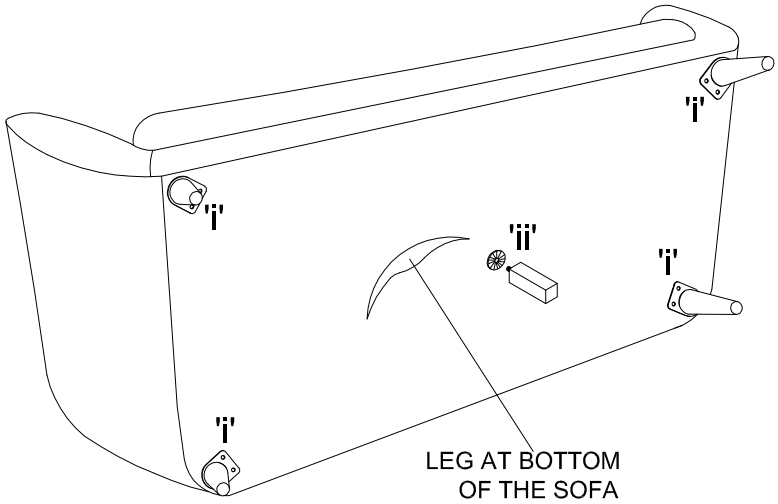

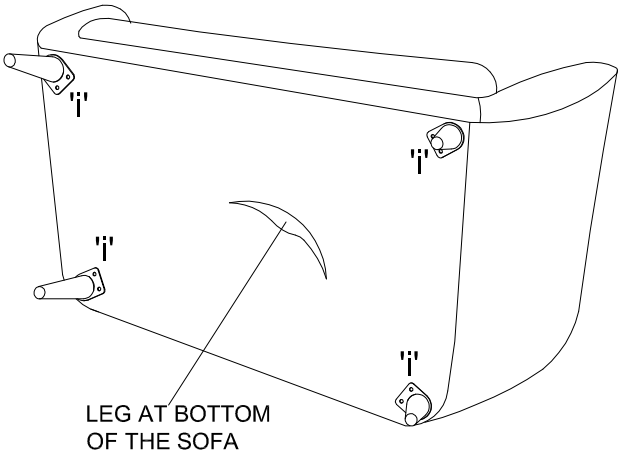

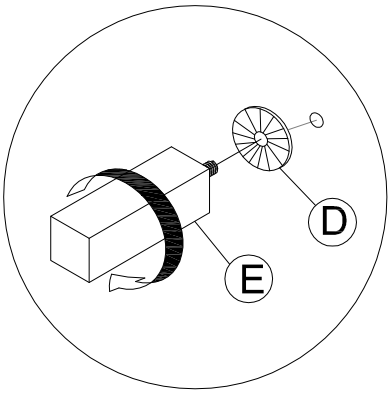

DETAIL ii

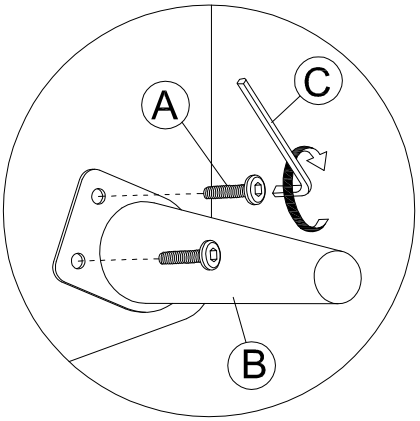
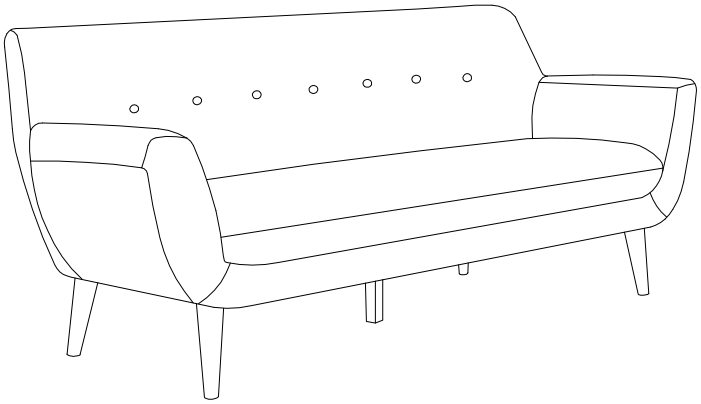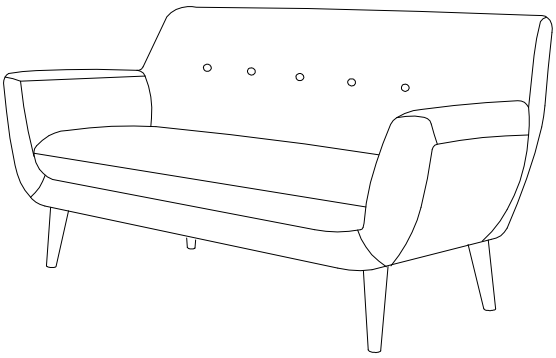
DETAIL i