ZOE SOVESOFA INKL 2 SOFAPUDER
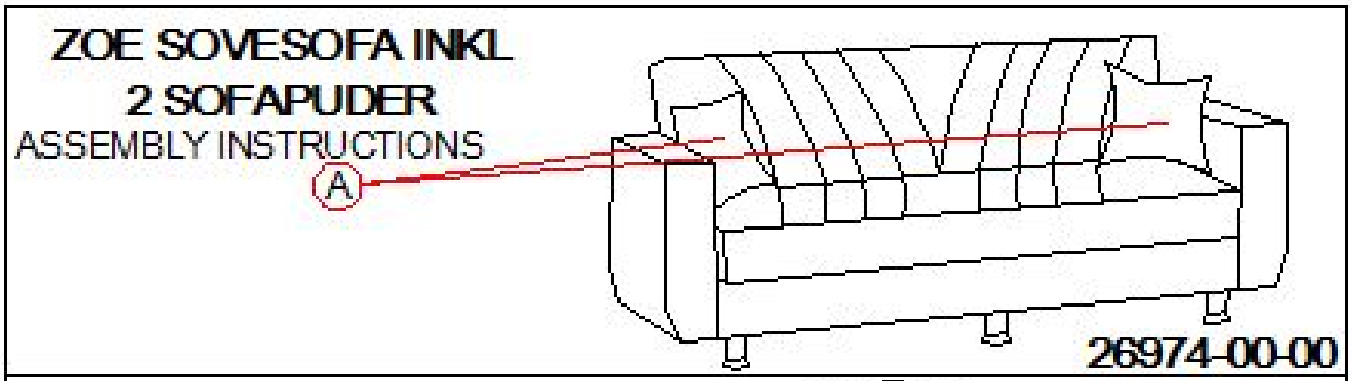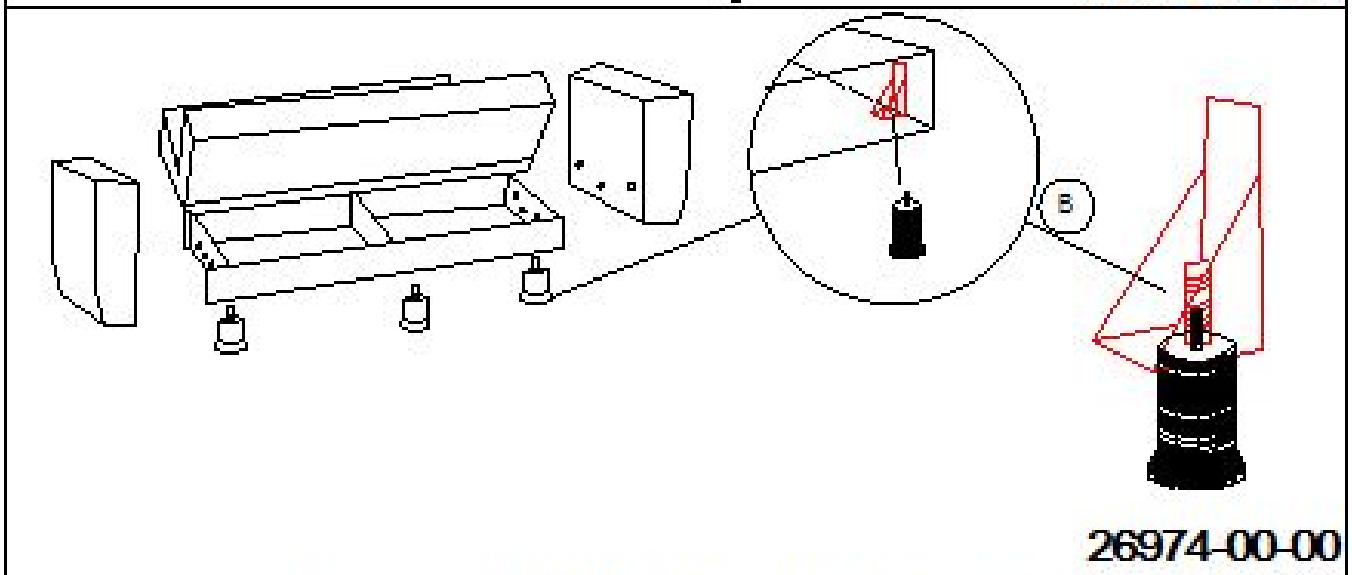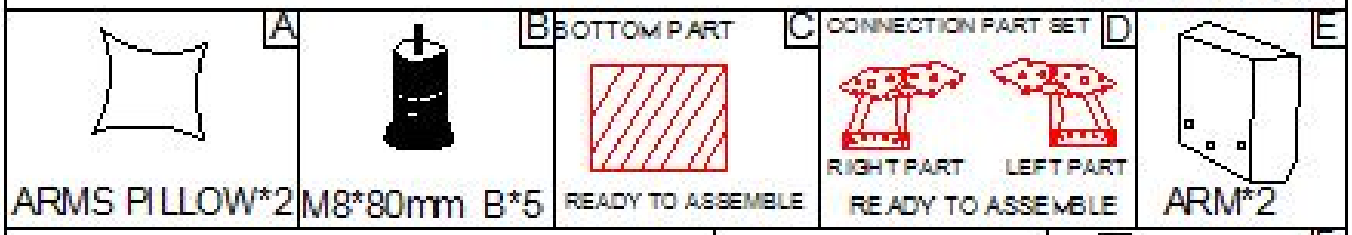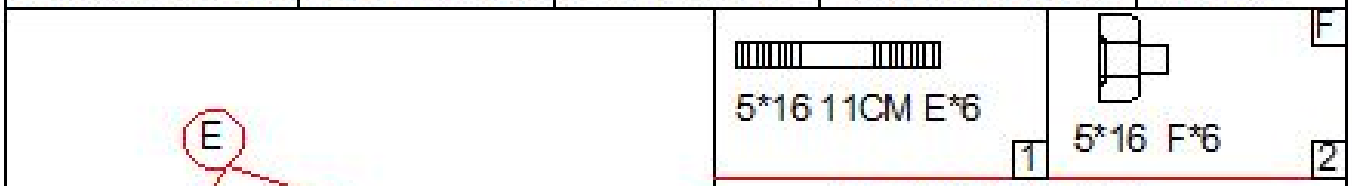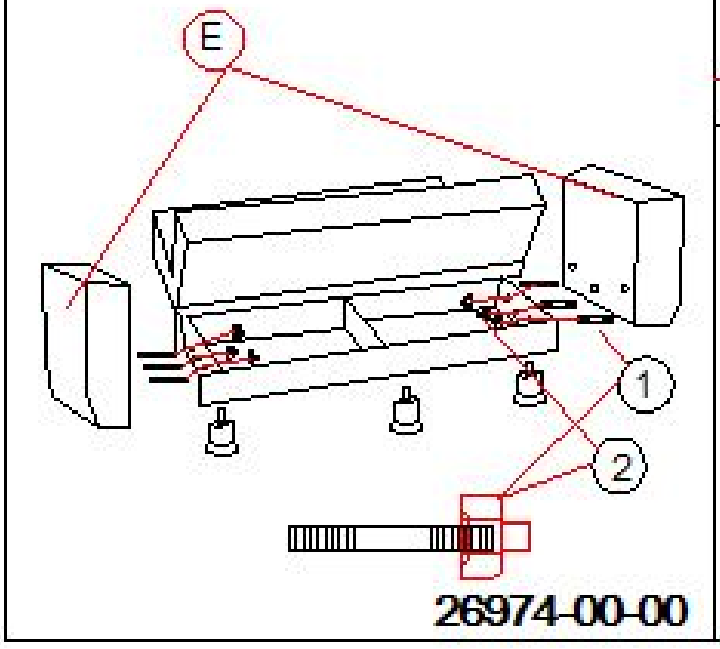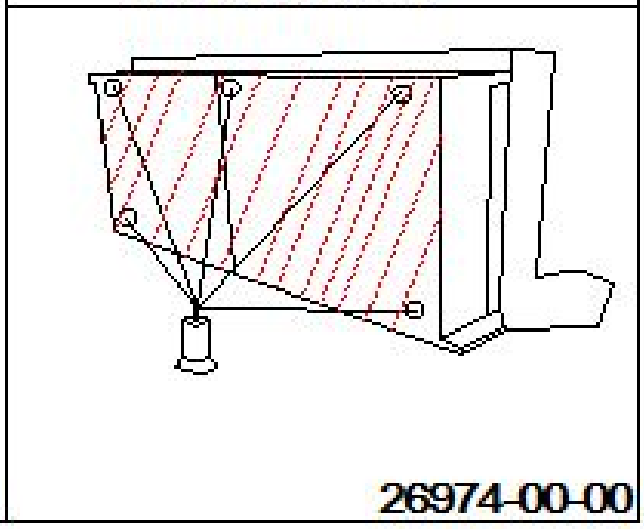
ASSEMBLY INSTRUCTIONS